LIMITED WARRANTY

What The Warranty Covers:
All products covered by this Owner's Manual are warranted against all defects in workmanship and materials. You must be the original purchaser or user of the product to be covered.

What The Period Of Coverage Is:
All components are covered by this warranty for one year from the date you purchased your fan control. ANY IMPLIED WARRANTY OF MERCHANTABILITY OR FITNESS FOR A PARTICULAR PURPOSE, MADE WITH RESPECT TO COMPONENTS AND ACCESSORIES IS ALSO LIMITED TO ONE YEAR.

What Will Emerson Electric Co. Do To Correct Problems:
Emerson Electric Co. will replace a defective Emerson Fan Control at no charge to you. We will ship the repaired product or replacement to you at no charge, but you are responsible for all costs or removal, reinstallation and shipping of the product to Emerson.

How Can You Get Service:
YOU MUST HAVE PROOF OF YOUR PURCHASE OF THE FAN CONTROL TO OBTAIN LIMITED WARRANTY SERVICE. KEEP YOUR RECEIPT OR OTHER PROOF OF PURCHASE. You can return the product to our factory or to your nearest authorized service center.

- To return the product to the factory, obtain a return authorization and service identification tag by writing to Air Comfort Products, Division of Emerson Electric Co., 8100 W. Florissant Ave., St. Louis, MO 63136. Include all model numbers shown on the product with your request.
- To return the product to an authorized service center, call 1-800-654-3545 for the address of the nearest authorized service center.

You will be responsible for all insurance, freight or other transportation charges to our factory or authorized service center. Your Emerson Fan Control should be properly packed to avoid damage in transit since we will not be responsible for any such damage.

What Is Not Covered:
This warranty also does not cover any defects, malfunctions or failures caused by:

- Repairs by persons not authorized by Emerson Electric Co.,
- Use of parts or accessories not authorized by Emerson Electric Co.,
- Mishandling, improper installation, modifications or damage to your wall control while in your possession, or
- Unreasonable use, misuse, abuse, including failing to do reasonable and necessary maintenance, and normal wear and tear.

Additionally, this warranty and any implied warranty of merchantability or fitness for a particular purpose are voided when:

- The original purchaser or user ceases to own the product, or
- The ceiling fan is moved from its original point of installation.

This warranty is only valid within the 50 states of the United States and the District of Columbia. No other written or oral warranties apply, and no employee, agent, dealer or other person is authorized to give any warranties on behalf of Emerson Electric Co.
REPAIR, REPLACEMENT OR A REFUND ARE THE EXCLUSIVE REMEDIES AVAILABLE UNDER THIS WARRANTY AND EMERSON IS NOT RESPONSIBLE FOR DAMAGES OF ANY KIND, INCLUDING INCIDENTAL AND CONSEQUENTIAL DAMAGES. Incidental damages include but are not limited to such damages as loss of time and loss of use. Consequential damages include but are not limited to the cost of repairing or replacing other property which was damaged if this product does not work properly.

How State Law Relates To The Warranty:
Some states do not allow the exclusion or limitation of incidental or consequential damages so the above exclusion or limitation may not apply to you. This warranty gives you specific legal rights, and you may also have other rights which vary from state to state.

EMERSON™
Air Comfort Products
DIVISION OF EMERSON ELECTRIC CO.
8100 W. Florissant • St. Louis, MO 63136

Form No. BP7441
Part No. F40BP74410000
Printed in China 09/11

CAUTION: Read all instructions carefully before installation. Save this Owner's Manual for future reference.

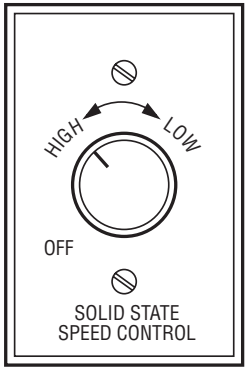

Model No.

SW81

INDUSTRIAL FAN WALL CONTROL

• 2-Wire • Infinitely Variable
• 3 Amps • Faceplate Included

EMERSON™

Industrial Fan Wall Control Owner's Manual

Form No. BP7441
Printed in China
U.L. Model No.: SW81

⚠ WARNING

Safety Instructions

WARNING: To avoid fire, shock, and serious personal injury, follow all instructions carefully.

1. Read your Owner's Manual carefully before installing the Wall Control. Retain Owner's Manual for future reference.
2. Before servicing or cleaning the ceiling fan, switch power off at service panel and lock service panel disconnecting means to prevent power from being switched on accidentally. When the service disconnecting means cannot be locked, securely fasten a warning device such as a tag, to the service panel.

ADDITIONAL SAFETY INSTRUCTIONS FOR INSTALLATION

1. To avoid possible electrical shock, be sure electricity is turned off at the main fuse or circuit breaker box before wiring.
2. Make certain no bare wires are exposed outside the wire connectors.
3. All wiring must conform to National and Local Electrical Codes.
4. Follow the recommended instructions for the proper method of wiring your new Wall Control. If you feel you do not have enough electrical wiring knowledge or experience, have your Wall Control installed by a licensed electrician. Any electrical work not described in this manual should be performed by a licensed electrician.

WARNING: Use of this control with some ceiling fans could result in fire, shock and serious personal injury. Use this speed control only with Emerson CF and HF series ceiling fans that are suitable for use with solid-state controls.

NOTE: Fans operated with this control must be suitable for use with solid-state speed controls. Refer to the ceiling fan owner's manual to confirm if your fans are permitted to use solid-state speed controls.

WARNING: This product is designed to use only those ceiling fans designated specifically for use with this product by Emerson Electric Co. Substitution of parts or accessories not designated for use with this product by Emerson Electric Co. could result in personal injury or property damage.

NOTES

NOTE: The WHITE neutral wires inside the electrical box must be connected together for proper operation of the wall control (Figure 2). NEVER connect the WHITE neutral wires to the SW81 wall control.

⚠ WARNING

Do not connect any neutral (WHITE) wire to this control. Incorrect wiring WILL damage this control.

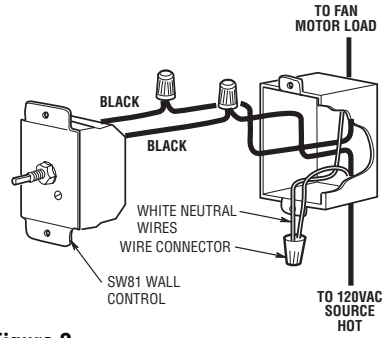

Figure 2

6. Securely connect one BLACK control wire to the (BLACK or RED) load wire from the ceiling fans with a wire connector (supplied) (Figure 3).
7. Securely connect the other BLACK control wire to the 120VAC BLACK hot supply wire with a wire connector (supplied).
8. Securely connect the GREEN ground wire from the control to the supply ground wire (bare or green).

⚠ WARNING

Check to see that all connections are tight, including ground, and that no bare wire is visible at the wire connectors, except for the ground wire.

SW81

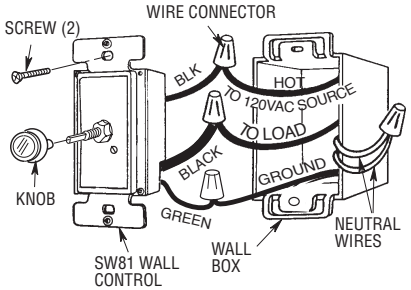

Figure 3

9. Carefully install the SW81 wall control into the electrical switch box using the installation screws supplied. Do not install the cover plate. Reinstall the knob to the wall control (Figure 3).
10. With the wall control set to the off position, restore electricity to the circuit from the circuit breaker panel or fuse box.

Minimum Speed Adjustment

1. Turn the wall control "ON" using the knob on the SW81. Set the fan to "High" speed and allow the fan to run for 30 minutes to normalize the motor temperature (Figure 4).

NOTE: To avoid erratic speeds and possible damage to your ceiling fan, set the fan's internal speed switch setting to High speed. It is highly recommend to cut the speed control pull chain 1-2 inches below the switch housing bushing to avoid unintentional usage.

SW81

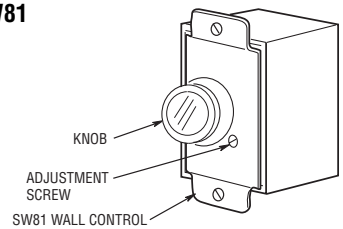

Figure 4

2. It is recommended that the fans rotate at a minimum of 60 RPM on low speed to avoid stalling the motor. To adjust the fan RPM, locate the adjustment screw on the control's front panel (Figure 4). With a small flat blade screw driver, slowly turn the adjustment screw clockwise to decrease RPM and counter-clockwise to increase RPM. Turn the adjustment screw in small increments and allow the fan to speed up or slow down before making the next adjustment.
3. Turn the fan(s) off using the SW81 knob.

Final Installation

1. Turn "Off" the electrical power for the fan circuit at the circuit breaker panel or fuse box.

⚠ WARNING

Turning off wall switch is not sufficient. To avoid possible electrical shock, be sure electricity is turned off at the main fuse or circuit breaker box before wiring. All wiring must be in accordance with National and Local codes and the ceiling fan must be properly grounded as a precaution against possible electrical shock.

2. Remove the speed adjustment knob from the control.
3. Install the front cover of the SW81 using two screws supplied (Figure 5).
4. Re-install the knob onto the control shaft.
5. Restore electricity to the circuit from the circuit breaker panel or fuse box.

SW81

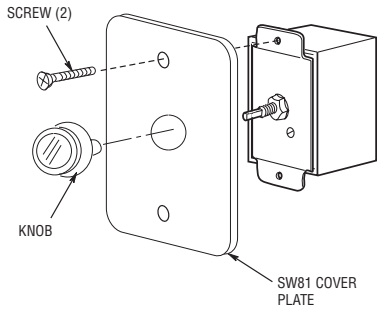

Figure 5

Operation

SW81- Turn the fans on by rotating the control knob clockwise past the off position. Adjust the fan speed to the desired comfort level by rotating between the low and high positions. To turn the fan(s) Off, rotate the knob fully counter-clockwise.

NOTE: Turning the speed control knob to high speed during start-up will assist starting the fans and avoid stalling conditions.

General

The SW81 control are designed to operate multiple fans without light kits. The SW81 is rated for 3.0 amps 120V full load. It is recommended the SW81 be loaded to a minimum of 1.5 amps with fans at high speed. All ceiling fans must be completely installed before installation of the SW81 wall control. Your new control will require a grounded electrical supply line of 120 volts AC, 60 Hz, 15 amp circuit.

Installation of Wall Control

NOTE: Ceiling fans equipped with built-in speed control devices must have the speed control set to the highest speed before installing the SW81 wall control. Failure to set and maintain the built-in device at the high speed setting could result in damage to your ceiling fan motors.

1. Before disconnecting electricity to your ceiling fans, verify that all fans are operating at their high speed setting.
2. Disconnect power to the ceiling fans at the circuit breaker panel or remove fuse from box.

CAUTION

To reduce the risk of electrical shock, disconnect the electrical supply circuit before installing the wall control.

3. Remove the faceplate and screws from the existing wall switch. Pull switch out from wall outlet box.

⚠ WARNING

Turning off wall switch is not sufficient. To avoid possible electrical shock, be sure electricity is turned off at the main fuse or circuit breaker box before wiring. All wiring must be in accordance with National and Local codes and the ceiling fan must be properly grounded as a precaution against possible electrical shock.

⚠ WARNING

To avoid possible fire or shock, follow all wiring instructions carefully. Any electrical work not described in these instructions should be done or approved by a licensed electrician.

4. Disconnect the electrical wires from the existing wall switch (Figure 1).

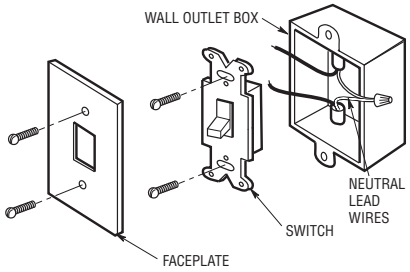

Figure 1

5. Set the SW81 control to “Off” by rotating the knob fully counter clockwise.